FAGOR

FAGOR AUTOMATION

Linear encoders series 2

for CNC Machines and High Accuracy Applications

G2A series

LINEAR

Linear encoder with small reader head, air intake and connector at both ends, with threaded head for different mounting options without the need for nuts.

Especially indicated for high standard environments in terms of speed and vibration.

Their special design of the securing points of the linear encoder (TDMS™), drastically reduces the effects and ensures the accuracy and repeatability of the encoders.

Measuring lengths in millimeters

140 • 240 • 340 • 440 • 540 • 640 • 740 • 840 • 940 • 1 040 • 1 140 • 1 240 • 1 340 • 1 440 • 1 540 • 1 640 • 1 740 • 1 840 • 2 040 • 2 240 • 2 440 • 2 640 • 2 840 • 3 040

Model description:

G2A: Absolute linear encoders with SSI protocol for FAGOR and others.

G2AS: Absolute linear encoders with SSI protocol for SIEMENS® (Solution Line).

G2AF: Absolute linear encoders with FANUC® (01, 02 and αi) protocol.

G2AM: Absolute linear encoders with MITSUBISHI® protocol.

G2AP: Absolute linear encoders with PANASONIC® (Matsushita) protocol.

G2AD: Absolute linear encoders with FeeDat® protocol for FAGOR and others.

G2AD + EC-PA-DQ: Absolute linear encoders with DRIVE-CLiQ® protocol, for SIEMENS® (Solution Line)

Characteristics

	G2A / G2AS		G2AF		G2AM		G2AP		G2AD		G2AD+ EC-PA-DQ	
Measurement	**Incremental:** By means of a 20 µm-pitch graduated glass tape **Absolute:** Optical reading of sequential binary code											
Glass thermal expansion coefficient	α_{therm}: 8 ppm/K approx.											
Measuring resolution	0.1 µm		Interface α 0.05 µm 0.01 µm	Interface αi 0.0125 µm 0.0025 µm	0.01 µm	0.05 µm	0.01 µm	0.05 µm	0.01 µm	0.05 µm	0.01 µm	0.05 µm
Output signals	∿ 1 Vpp		–		–		–		–		–	
Incremental signal period	20 µm		–		–		–		–		–	
Limit frequency	< 100 kHz for 1 Vpp		–		–		–		–		–	
Maximum cable length	75 m	100 m	30 m		30 m		30 m		100 m		30 m	
Supply voltage	5V ± 10%, 250 mA (without load)											
Accuracy	± 5 µm/m ± 3 µm/m											
Maximum speed	180 m /min		180 m/min		180 m/min		180 m/min		180 m/min		180 m/min	
Maximum vibration	200 m/s² (55 … 2000 Hz) IEC 60068-2-6											
Maximum shock	300 m/s² (11 ms) IEC 60068-2-27											
Maximum acceleration	100 m/s² in the measuring direction											
Required moving force	< 5 N											
Operating temperature	0 ºC … 50 ºC											
Storage temperature	-20 ºC ... 70 ºC											
Weight	0.25 kg + 2.25 kg/m											
Relative humidity	20 … 80%											
Protection	IP 53 (standard) IP 64 (DIN 40050) using pressurized air at 0.8 ± 0.2 bar in linear encoders											
Reader head	With built-in connector Connection at both ends of the reader head											

G2A model

Dimensions in mm

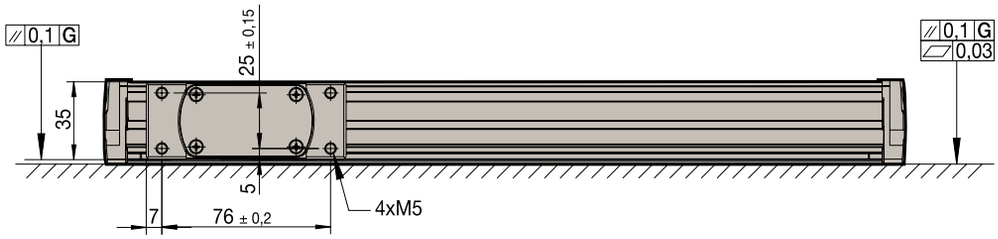

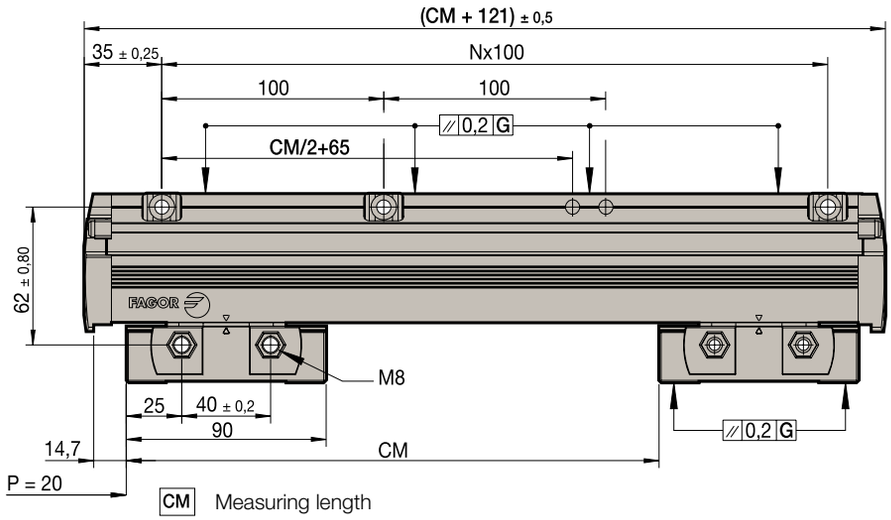

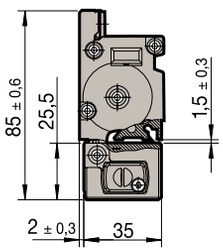

CM	Measuring length
G	Machine way
P	Absolute position

Order identification

Example of Linear Encoder: **G2AF10-1640-5-A-T**

G2	A	F	10	1640	5	A	T
Type of profile for ample space, small head	*Letter identifying the absolute encoder*	*Type of communications protocol:* • Blank space: SSI protocol (FAGOR) • D: FeeDat® protocol (FAGOR) • S: SSI SIEMENS® (SL) protocol • **F: FANUC® (01, 02 and αi) protocol** • M: MITSUBISHI® CNC protocol (High Speed Serial Interface) • P: PANASONIC® (Matsushita) protocol	*Resolution:* • Blank space: up to 0.1 um • 50: 0.05 µm • **10: 0.01 µm**	*Measuring lengths in millimeters:* In the example (1640) = 1 640 mm	*Accuracy of the linear encoder:* • **5: ± 5 µm** • 3: ± 3 µm	*Air intake on the reader head:* • **A: With air intake**	*Threaded head:* • Blank space: M8 • **T: M6**

S2A series

LINEAR

Linear encoder with threaded head option for different mounting options without the need for nuts.

Especially indicated for high standard environments in terms of speed and vibration.

Measuring lengths in millimeters

70 • 120 • 170 • 220 • 270 • 320 • 370 • 420 • 470 • 520 • 570 • 620 • 670 • 720 • 770 • 820 • 870 • 920 • 1 020 • 1 140 • 1 240

Model description:

S2A: Absolute linear encoders with SSI protocol for FAGOR and others.

S2AS: Absolute linear encoders with SSI protocol for SIEMENS® (Solution Line).

S2AF: Absolute linear encoders with FANUC® (01, 02 and αi) protocol.

S2AM: Absolute linear encoders with MITSUBISHI® protocol.

S2AP: Absolute linear encoders with PANASONIC® (Matsushita) protocol.

S2AD: Absolute linear encoders with FeeDat® protocol for FAGOR and others.

S2AD + EC-PA-DQ: Absolute linear encoders with DRIVE-CLiQ® protocol, for SIEMENS® (Solution Line)

Characteristics

	S2A / S2AS		S2AF		S2AM		S2AP		S2AD		S2AD+ EC-PA-DQ	
Measurement	**Incremental:** By means of a 20 µm-pitch graduated glass tape **Absolute:** Optical reading of sequential binary code											
Glass thermal expansion coefficient	α_{therm}: 8 ppm/K approx.											
Measuring resolution	0.1 µm		Interface α 0.05 µm 0.01 µm	Interface αi 0.0125 µm 0.0025 µm	0.01 µm	0.05 µm	0.01 µm	0.05 µm	0.01 µm	0.05 µm	0.01 µm	0.05 µm
Output signals	∼ 1 Vpp		–		–		–		–		–	
Incremental signal period	20 µm		–		–		–		–		–	
Limit frequency	< 100 kHz for 1 Vpp		–		–		–		–		–	
Maximum cable length	75 m	100 m	30 m		30 m		30 m		100 m		30 m	
Supply voltage	5V ± 10%, 250 mA (without load)											
Accuracy	± 5 µm/m ± 3 µm/m											
Maximum speed	180 m /min		180 m/min		180 m/min		180 m/min		180 m/min		180 m/min	
Maximum vibration	100 m/s² (55 … 2000 Hz) IEC 60068-2-6											
Maximum shock	300 m/s² (11 ms) IEC 60068-2-27											
Maximum acceleration	100 m/s² in the measuring direction											
Required moving force	< 4 N											
Operating temperature	0 ºC … 50 ºC											
Storage temperature	-20 ºC ... 70 ºC											
Weight	0.2 kg + 0.50 kg/m											
Relative humidity	20 … 80%											
Protection	IP 53 (standard) IP 64 (DIN 40050) using pressurized air at 0.8 ± 0.2 bar in linear encoders											
Reader head	With built-in connector											

S2A model

Dimensions in mm

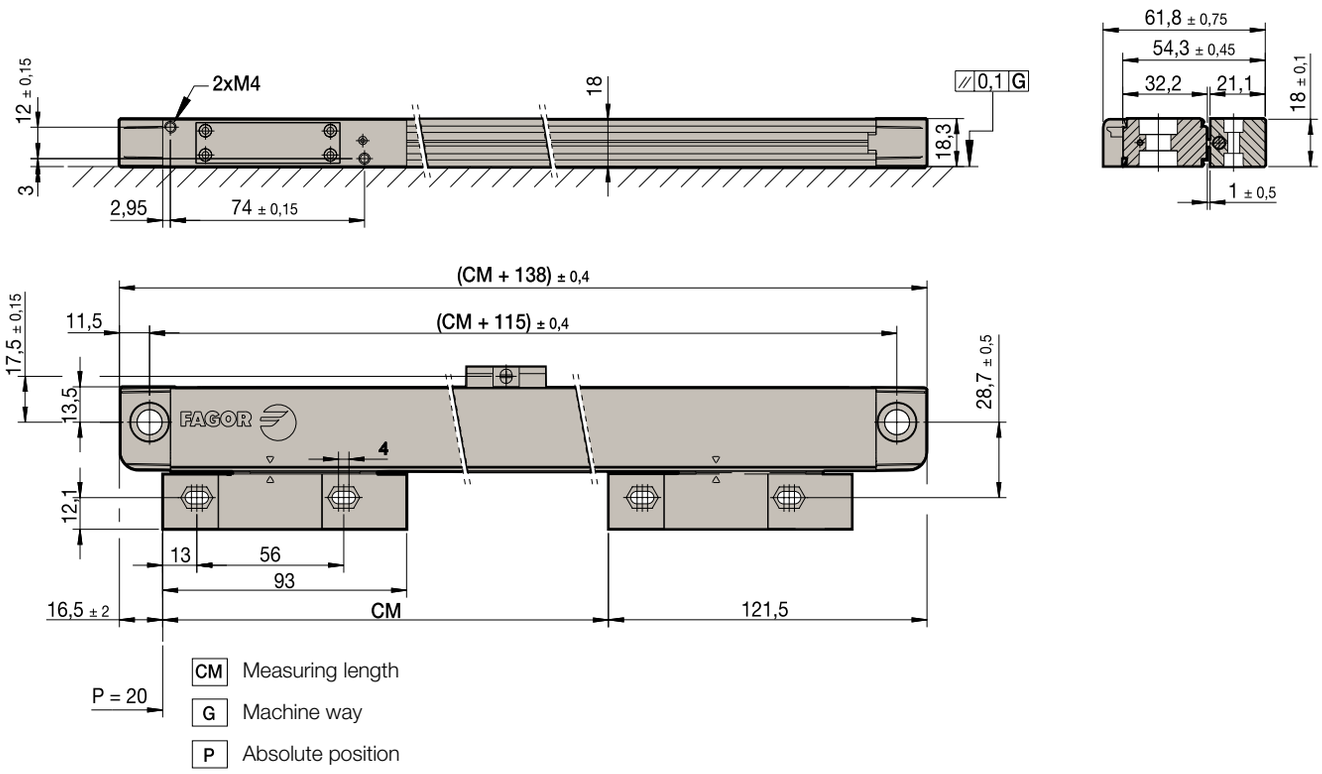

Order identification

Example of Linear Encoder: **S2AM10-1640-5-A-T**

S2	A	M	10	1640	5	A	T
Type of profile for reduced space: • **S2: Standard mounting for vibrations of up to 100 m/s²**	*Letter identifying the absolute encoder*	*Type of communications protocol:* • Blank space: SSI protocol (FAGOR) • D: FeeDat® protocol (FAGOR) • S: SSI SIEMENS® (SL) protocol • F: FANUC® (01, 02 and αi) protocol • **M: MITSUBISHI® CNC protocol (High Speed Serial Interface)** • P: PANASONIC® (Matsushita) protocol	*Resolution:* • Blank space: up to 0.1 um • 50: 0.05 µm • **10: 0.01 µm**	*Measuring lengths in millimeters:* In the example (1640) = 1 640 mm	*Accuracy of the linear encoder:* • **5: ± 5 µm** • 3: ± 3 µm	*Air intake on the reader head:* • **A: With air intake**	*Threaded head:* • Blank space: No • **T: M4**

SV2A series

LINEAR

Linear encoder with threaded head option for different installation options without the need for nuts.
Small mounting support that may be secured from the top or from the bottom for easier installation.

Especially indicated for high standard environments in terms of speed and vibration.

Their special design of the securing points of the linear encoder (TDMS™), drastically reduces the effects and ensures the accuracy and repeatability of the encoders.

Measuring lengths in millimeters

70 • 120 • 170 • 220 • 270 • 320 • 370 • 420 • 470 • 520 • 570 • 620 • 670 • 720 • 770 • 820 • 870 • 920 • 970 • 1 020 • 1 070 • 1 140 • 1 240 • 1 340 • 1 440 • 1 540 • 1 640 • 1 740 • 1 840 • 2 040

Model description:

SV2A: Absolute linear encoders with SSI protocol for FAGOR and others.

SV2AS: Absolute linear encoders with SSI protocol for SIEMENS® (Solution Line).

SV2AF: Absolute linear encoders with FANUC® (01, 02 and αi) protocol.

SV2AM: Absolute linear encoders with MITSUBISHI® protocol.

SV2AP: Absolute linear encoders with PANASONIC® (Matsushita) protocol.

SV2AD: Absolute linear encoders with FeeDat® protocol for FAGOR and others.

SV2AD + EC-PA-DQ: Absolute linear encoders with DRIVE-CLiQ® protocol, for SIEMENS® (Solution Line)

Characteristics

	SV2A /SV2AS		SV2AF		SV2AM		SV2AP		SV2AD		SV2AD+ EC-PA-DQ	
Measurement	**Incremental:** By means of a 20 µm-pitch graduated glass tape **Absolute:** Optical reading of sequential binary code											
Glass thermal expansion coefficient	α_{therm}: 8 ppm/K approx.											
Measuring resolution	0.1 µm		Interface α 0.05 µm 0.01 µm	Interface αi 0.0125 µm 0.0025 µm	0.01 µm	0.05 µm	0.01 µm	0.05 µm	0.01 µm	0.05 µm	0.01 µm	0.05 µm
Output signals	∿ 1 Vpp		–		–		–		–		–	
Incremental signal period	20 µm		–		–		–		–		–	
Limit frequency	< 100 kHz for 1 Vpp		–		–		–		–		–	
Maximum cable length	75 m	100 m	30 m		30 m		30 m		100 m		30 m	
Supply voltage	5V ± 10%, 250 mA (without load)											
Accuracy	± 5 µm/m ± 3 µm/m											
Maximum speed	180 m /min		180 m/min		180 m/min		180 m/min		180 m/min		180 m/min	
Maximum vibration	200 m/s² (55 … 2000 Hz) IEC 60068-2-6											
Maximum shock	300 m/s² (11 ms) IEC 60068-2-27											
Maximum acceleration	100 m/s² in the measuring direction											
Required moving force	< 4 N											
Operating temperature	0 ºC … 50 ºC											
Storage temperature	-20 ºC ... 70 ºC											
Weight	0.25 kg + 1.55 kg/m											
Relative humidity	20 … 80%											
Protection	IP 53 (standard) IP 64 (DIN 40050) using pressurized air at 0.8 ± 0.2 bar in linear encoders											
Reader head	With built-in connector											

SV2A model

Dimensions in mm

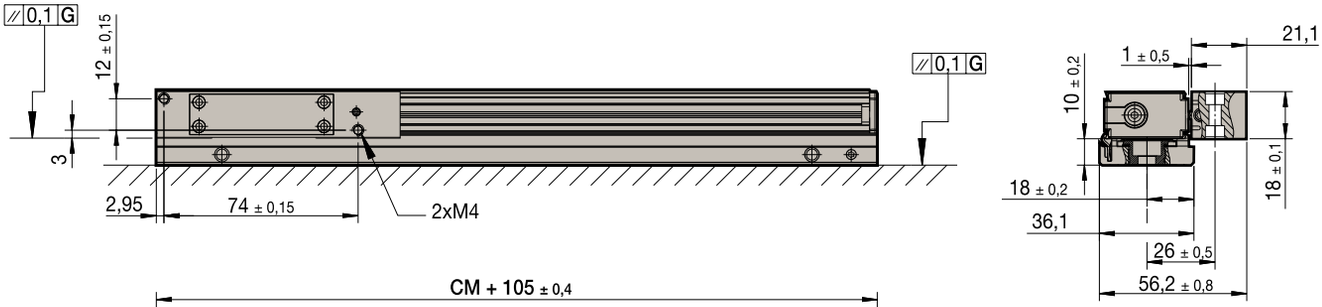

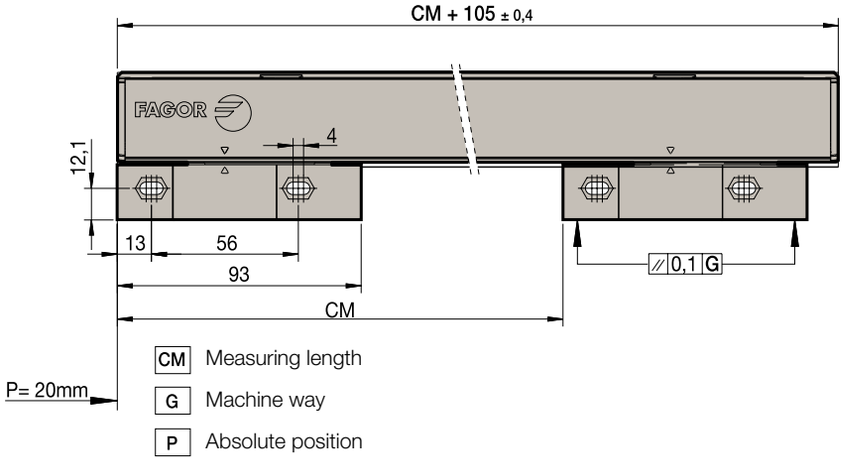

CM Measuring length

G Machine way

P Absolute position

CM	70	120	170	220	270	320	370	420	470	520	570	620	670	720	770
M	37.5	55	75	100	115	140	175	200	225	250	275	300	325	350	375
CM	820	870	920	970	1020	1070	1140	1240	1340	1440	1540	1640	1740	1840	2040
M	400	425	450	475	500	515	555	610	655	710	760	810	855	910	1010

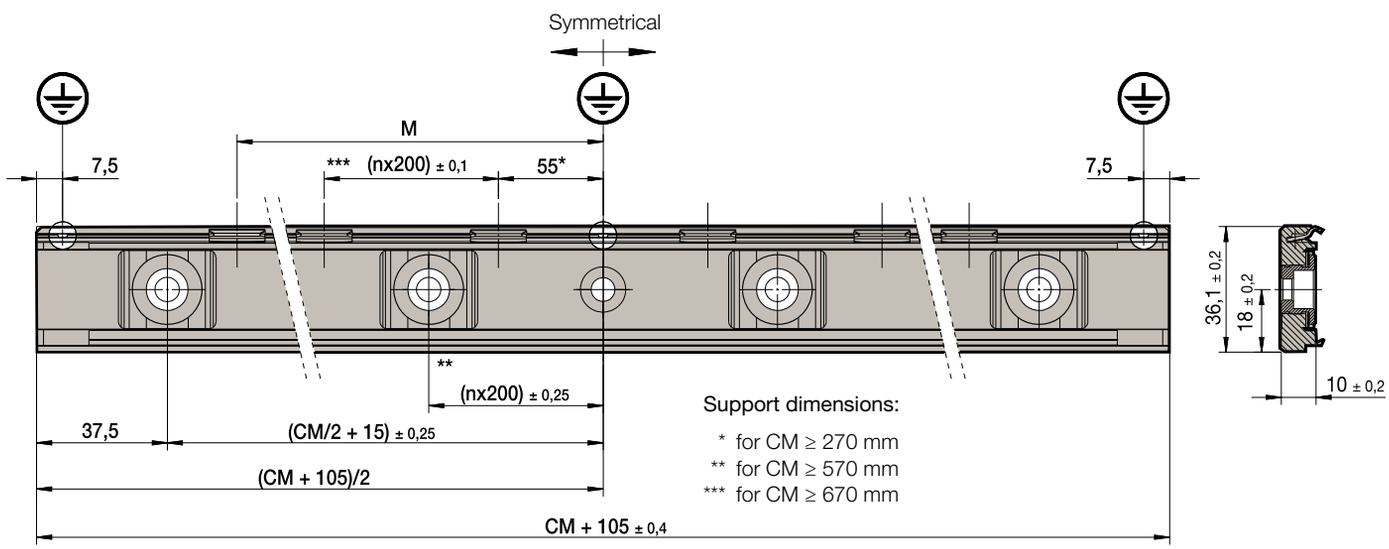

Order identification

Example of Linear Encoder: **SV2AF10-1640-5-B-A-T**

SV2	A	F	10	1640	5	B	A	T
Type of profile for reduced spaces: • **SV2: Vibration mounting for up to 200 m/s²**	*Letter identifying the absolute encoder*	*Type of communications protocol:* • Blank space: SSI protocol (FAGOR) • D: FeeDat® protocol (FAGOR) • S: SSI SIEMENS® (SL) protocol • **F: FANUC® (01, 02 and αi) protocol** • M: MITSUBISHI® CNC protocol (High Speed Serial Interface) • P: PANASONIC® (Matsushita) protocol	*Resolution:* • Blank space: up to 0.1 um • 50: 0.05 µm • **10: 0.01 µm**	*Measuring lengths in millimeters:* In the example (1640) = 1 640 mm	*Accuracy of the linear encoder:* • **5: ± 5 µm** • 3: ± 3 µm	*Linear encoder with mounting support:* • **B: With mounting support for vibrations of up to 200 m/s²**	*Air intake on the reader head:* • **A: With air intake**	*Threaded head:* • Blank space: No • **T: M4**

FAGOR

FAGOR AUTOMATION

Fagor Automation, S. Coop.
Bº San Andrés, 19
E-20500 Arrasate - Mondragón
SPAIN
Tel.: +34 943 039 800
Fax.: +34 943 791 712
E-mail: info@fagorautomation.es

Fagor Automation holds the ISO 9001 Quality System Certificate and the CE Certificate for all products manufactured.

www.fagorautomation.com

EPS - CAP S2 EN 0915

worldwide automation